# DOOSAN INFRACORE GENSETS ENGINES

# SP344CB

| Engine Model | rpm | Gross Engine Output[kWm] | |
|---|---|---|---|
| | | Stand-by | Prime |
| SP344CB | 1,500 | 61 | 56 |
| | 1,800 | 74 | 67 |

**Ratings Definitions**

Electric power(kWe) should be estimated by considering generator efficiency, cooling fan power loss and power derating due to altitude and ambient temperature.

STANDBY POWER RATING is applicable for supplying emergency power for the duration of the utility power outage.
No overload capability is available for this rating. A standby rated engine should be sized for a maximum of an 70% average load factor and 200 hours of operation per year. This includes less than 25 hours per year at the Standby Power rating.

PRIME POWER RATING is available for an unlimited of hours per year in variable load application. Variable load should not exceed a 70% average of the Prime Power rating during any operating period of 24 hours. The Total operating time at 100% Prime Power shall not exceed 500 hours per year. A 10% overload capability is available for a period of 1 hour within a 12 hour period of operation.
Total operating time at the 10% overload power shall not exceed 25 hours per year.

**◎ GENERAL ENGINE DATA**

| | |
|---|---|
| ○ Engine Model | SP344CB |
| ○ Engine Type | 4-stroke, in-line 4 cylinder, water cooled, common rail direct injection |
| ○ Bore x stroke | 98 × 113 mm |
| ○ Displacement | 3.4 liters |
| ○ Compression ratio | 16.8 : 1 |
| ○ Rotation | Clockwise viewed from the front |
| ○ Firing order | 1 - 3 - 4 - 2 |
| ○ Dry weight | 472 kg (Genset condition) |
| ○ Dimension (LxWxH) | 1138.5 × 783 × 1135 mm |
| ○ Idle speed | 800 ±15 rpm |
| ○ Governor Regulation | ≤ 5 % |
| ○ Maximum permissible high altitude (No torque derating) | 2500 m |
| ○ Moment of inertia | 0.804 $kgm^2$ |
| ○ Flywheel Housing | SAE #3 (SAE J617) |
| ○ Flywheel Clutch Size | 11-1/2" (SAE J620) |
| ○ No. of Ring Gear Teeth | 125 |

**◎ AIR INTAKE SYSTEM**

| | |
|---|---|
| ○ The maximum temperature rise | 15 ℃ |
| ○ Maximum inlet temperature | 52 ℃ |
| ○ Minimum inlet pressure | 100 kPa |
| ○ Max. permissible air intake restriction at engine (dirty filter) | 6.5 kPa |
| ○ Max. permissible air intake restriction at engine (clean filter) | 3 kPa |
| ○ Air filter type | Dry element type |
| ○ Minimum dirt capacity | 1200 g |

**◎ EXHAUST SYSTEM**

| | |
|---|---|
| ○ Maximum permissible back pressure for total system | 6 kPa |
| ○ Exhaust gas flow(prime) | 4.5 (50HZ), 5.4 (60HZ) $m^3$/min |
| ○ Exhaust gas flow(standby) | 4.7 (50HZ), 5.5 (60HZ) $m^3$/min |
| ○ Exhaust gas temperature(prime) | 505 (50HZ), 530 (60HZ) ℃ |
| ○ Exhaust gas temperature(standby) | 550 (50HZ), 570 (60HZ) ℃ |

**◎ COOLING SYSTEM**

| | |
|---|---|
| ○ Total system coolant capacity | 14.2 L |
| ○ Thermostat operation range | 80 ~ 90 ℃ |
| ○ Maximum permissible external system resistance | 25 kPa |
| ○ Maximum temperature to engine | 105 ℃ |
| ○ Minimum temperature to engine | 70 ℃ |

| | |
|---|---|
| ○ Coolant temperature alarm | 105 ℃ |
| ○ Limits of the environment temperature | 52 ℃ |

### ◎ RADIATOR SYSTEM

| | |
|---|---|
| ○ Radiator | Fin & Tube |
| ○ Radiator cooling area | Fin: 29.9 $m^2$ / Tube: 5.2 $m^2$ |
| ○ Length x height x width | 740 × 977 × 338 mm |
| ○ Pressure cap setting | 0.9 ± 0.15 kPa |
| ○ Maximum top tank temperature | 105 ℃ |

### ◎ FAN SYSTEM

| | |
|---|---|
| ○ Diameter | 480 mm |
| ○ Driver radio | 1 : 1.3 (Crank : Fan) |
| ○ Number of blade | 7 |
| ○ Material | Plastic |

### ◎ LUBRICATION SYSTEM

| | |
|---|---|
| ○ Lubrication oil capacity | 6 ~ 12.6 L |
| ○ Lubrication oil pressure | min 250 kPa (50Hz) / min 300 kPa (60Hz) |
| ○ Lubrication oil temperature | At normal operation 105 ℃, Maximum 125 ℃ |
| ○ Lubrication oil consumption as % of fuel consumption | 0.1 % maximum |
| ○ Pressure of oil relief valve opening | 550 ± 50 kPa |

### ◎ FUEL SYSTEM

| | |
|---|---|
| ○ Pump | High pressure common rail pump |
| ○ System inlet pressure | 0.35 ~ 1 bar (abs) |
| ○ System pressure | 1800 bar |

### ◎ ELECTRICAL SYSTEM

| | |
|---|---|
| ○ Alternator | 12 V / 110 A |
| ○ Starter motor | 12 V / 2.5 kW |

### ◎ ENGINE DIMENSION

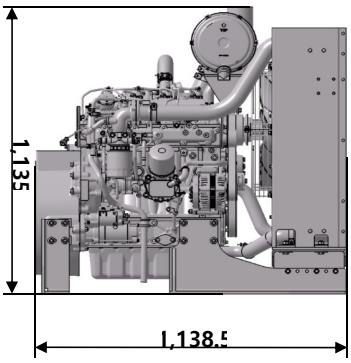


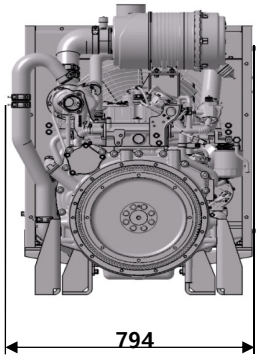


### ◆ CONVERSION TABLE

| | |
|---|---|
| in. = mm x 0.0394 | lb/ft = N.m x 0.737 |
| PS = kW x 1.3596 | U.S. gal = lit. x 0.264 |
| psi = kg/cm2 x 14.2233 | kW = 0.2388 kcal/s |
| in3 = lit. x 61.02 | lb/PS.h = g/kW.h x 0.00162 |
| hp = PS x 0.98635 | cfm = $m^3$/min x 35.336 |
| lb = kg x 2.20462 | MPa = kPa x 1000 = bar x 10 |
| kW = kcal/sec x 0.239 | |

**Doosan Infracore Co., Ltd**
28st Floor, Doosan Tower, 18-12, Euljiro 6-ga, Jung-gu, Seoul, Korea.

**TEL : +82-2-3398-8899/ FAX : +82-2-3398-8898**
**E-mail : enginesales@doosan.com**
**Web site : www.doosaninfracore.com**